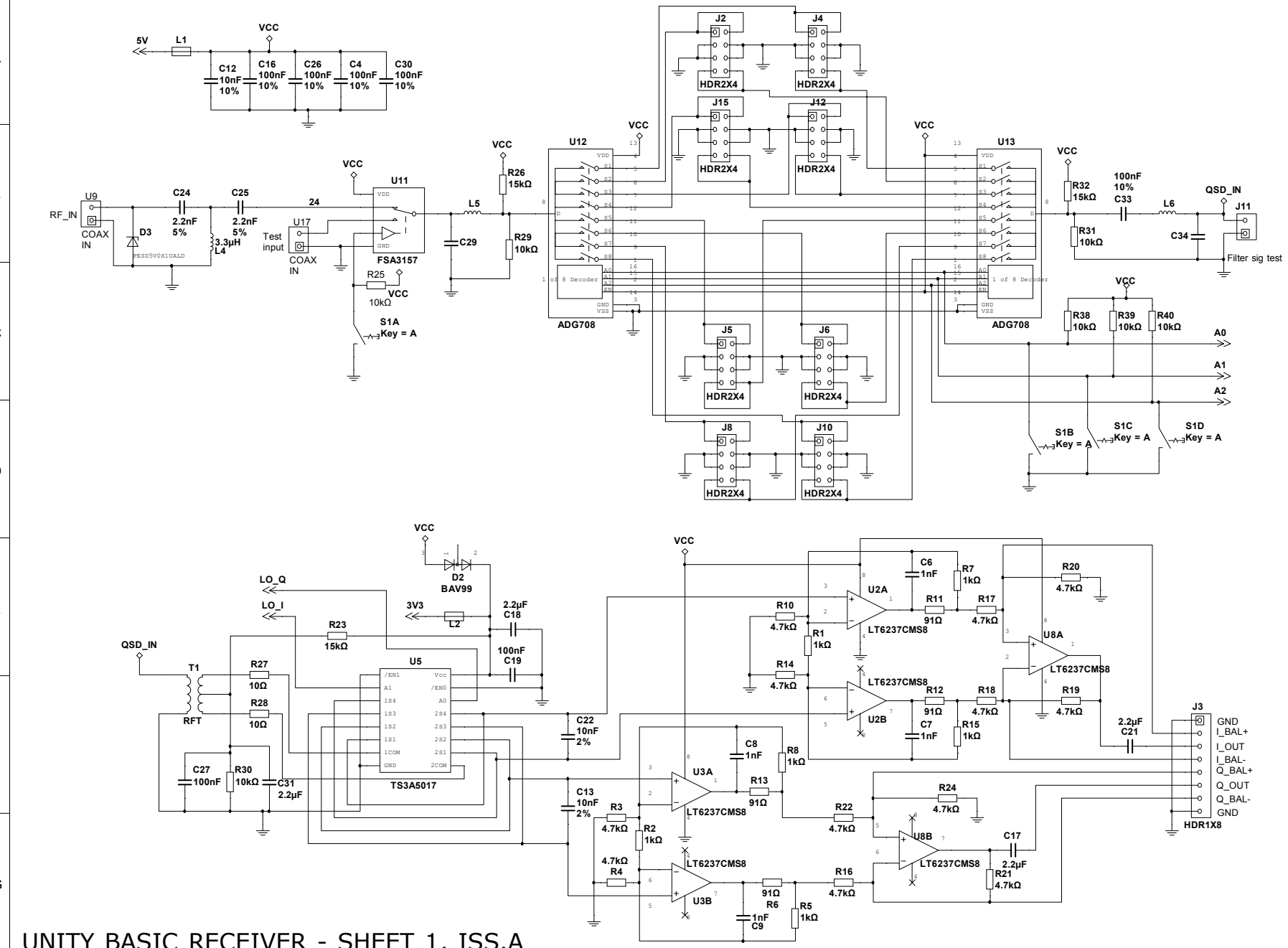

UNITY BASIC RECEIVER - SHEET 1, ISS.A

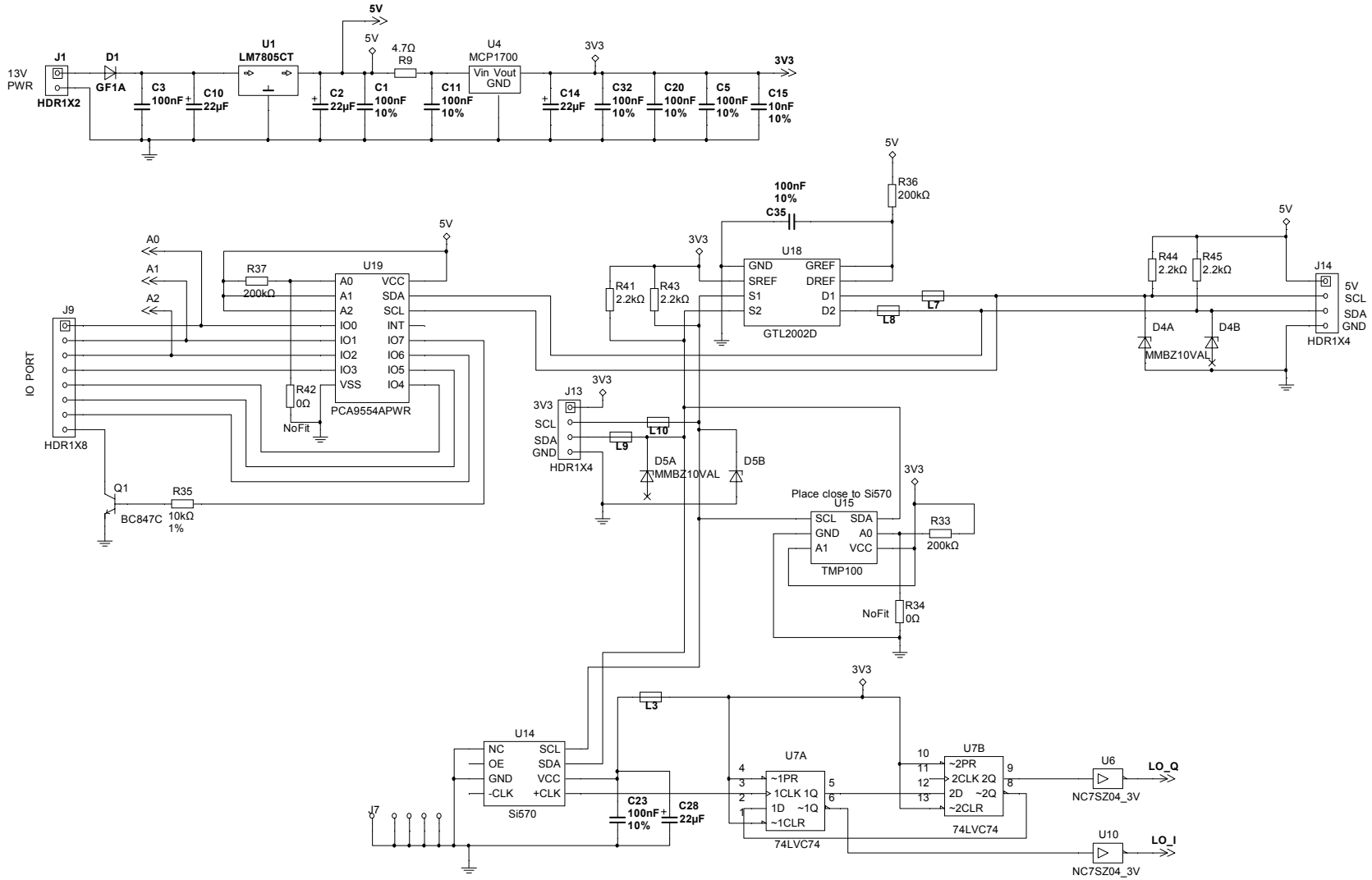

UNITY BASIC RECEIVER - SHEET 2, ISS.A